ENGINEERING
TOMORROW

Brochure | iC2-Micro & VLT® Micro Drive FC 51

Comparison of features and specifications for **iC2-Micro** and **VLT® Micro Drive FC 51**

Run reliably at full load for ambient temperatures up to

50 °C

drives.danfoss.com

Contents

General comparison of iC2-Micro and VLT® Micro Drive FC 51 3
Model code and type code comparison 4
Product models comparison 5
Comparison of dimensions and mounting clearance 6
Comparison of terminals 8

For your convenience in selecting and retrofitting drives, we provide some key comparative features and specifications of the iC2-Micro and VLT® Micro Drive FC 51. Every attempt has been made to ensure the accuracy of the information.

iC2-Micro

VLT® Micro Drive FC 51

General **comparison** of iC2-Micro and VLT® Micro Drive FC 51

Key specifications

Attribute	iC2-Micro	VLT® Micro Drive FC 51
1-phase 200-240 V	0.37 – 2.2 kW	0.18 – 2.2 kW
3-phase 200-240 V	N.A.	0.25 – 3.7 kW
3-phase 380-480 V	0.37 – 22 kW	0.37 – 22 kW
Enclosure	IP20/Open type	IP20/Open type
Motor type	IM, PM (SPM & IPM)	Only IM
Motor identification	Automatic Motor Adaptation (AMA)	Automatic Motor Tuning (AMT)
Output frequency	**Induction motor** • 0-200 Hz (VVC+ mode) • 0-500 Hz (U/f mode) **PM motor** • 0-400 Hz (VVC+ mode)	**Induction motor** • 0-200 Hz (VVC+ mode) • 0-400 Hz (U/f mode)
Ramp time	0.01-3600 sec	0.05-3600 sec
Overload capacity	150% for 1 minute	150% for 1 minute
Overload torque at start	200%/1 s	N.A.
Maximum motor cable length (unshielded)	75 m (246 ft)	50 m (164 ft)
EMC filter	Two versions: • Built-in EMC filter • Without built-in EMC filter	Built-in EMC fitler
Cooling fan	Replacable fan with fan on/off control	Fixed fan without fan control
Ambient temperature	50 °C (122 °F) at full load Max. 55 °C (131 °F) with derating	40 °C (104 °F) at full load Max. 50 °C (122 °F) with derating
Natural cooling	Up to 0.75 kW (1-phase 200-240 V)	N.A.
HMI	Built-in control panel with potentiometer as default. External control panel [1] as option: • Multi-language texts display • Easy for commissioning • Parameters setting and copy • Support two kinds of cabinet mounting kit For control panel details, refer to the Application Guide	Detachable numerical control panel as option: • VLT® Control Panel LCP 11 without potentiometer • VLT® Control Panel LCP12 with potentiometer For control panel details, refer to the Programming Guide
PC tool	MyDrive® Insight	VLT® Motion Control Tool MCT 10
Torque control	Torque open loop control	N.A.
Process controller	PID controller	PI controller
Logical control	Logic/sequence customizer [1]	Smart Logic Controller (SLC)
RS485 port baud rate	Max. 115,000 baud communication speed	Max. 38,400 baud communication speed
Extra RJ45 port	RS485 based, and used for connecting external control panel and PC tool.	N.A.
Safety standards	EN/IEC 61800-5-1, UL 61800-5-1	EN/IEC 61800-5-1, UL 508C
New features	• Kinetic backup • Clockwise direction • Latch start reverse • Input phase loss trip • Setting wizard with application selections • Off-line configuration tool [1] • Motor winding monitoring [1] • Load envelope monitor [1] • HVAC related functions [1]	N.A.

[1] Upcoming function or feature

Model code and **type code** comparison

iC2-Micro model code definition

1	2	3	4	5	6	7	8	9	10	11	12	13	14	15	16	17	18	19	20	21	22	23	24	25	26	27
i	C	2	–	3	0	F	A	3	N	0	4	–	0	1	A	2	E	2	0	F	4	+	A	C	X	X
								1	N	0	2									F	2		A	C	B	C
																				F	0					

Product group
iC2-30

Product category
FA Frequency converter air cooled

Product type
3N Three phases
1N Single phase

Mains voltage
04 380-480 V AC
02 200-240 V AC

***Current rating**
01A2 1.2 A
02A2 2.2 A
03A7 3.7 A
04A2 4.2 A
05A3 5.3 A
06A8 6.8 A
07A2 7.2 A
09A0 9.0 A
09A6 9.6 A

Protection rating
E20 IP20/Open Type

EMC category
F4 C4 category
F2 C2 category
F0 C1 category

Brake chopper
+ACXX None
+ACBC Integrated

VLT® Micro Drive FC 51 type code definition

1	2	3	4	5	6	7	8	9	10	11	12	13	14	15	16	17	18	19	20	21	22	23	24	25	26	27
F	C	–	0	5	1	P	K	3	7	T	4	E	2	0	H	3	X	X	C	X	X	X	S	X	X	X
										T	2				H	X	B									
										S	2															

Product series
VLT® Micro Drive FC51

Power size

Mains voltage
S2 Single phase 200-240 V AC
T2 Three phases 200-240 V AC
T4 Three phases 380-480 V AC

Protection rating
E20 IP20/Chassis

RFI filter
H3 RFI Class A1/B
HX No RFI filter

Brake chopper
X No brake chopper
B Brake chopper

Hardware display
X No display

Hardware, coating
C Coated PCB

Hardware, mains option
X No mains option

Hardware, adaption A
X No adapation

Hardware, adaption B
X No adapation

SXXX Standard SW

Product models comparison

Voltage 1 x 200-240 V AC

Power rating [kW/ hp]	Current rating [A]	iC2-Micro				VLT® Micro Drive FC 51			
		Model code	Enclosure	EMC level	Brake chopper	Type code	Enclosure	EMC level	Brake chopper
0.18/ 0.24	1.2	N.A.				FC-51PK18S2E20H3XXCXXXSXXX	M1	C1	No
0.37/ 0.5	2.2	iC2-30FA1N02-02A2E20F0+ACXX iC2-30FA1N02-02A2E20F4+ACXX	MA01c	C1 & C4	No	FC-51PK37S2E20H3XXCXXXSXXX	M1	C1	No
0.75/ 1.0	4.2	iC2-30FA1N02-04A2E20F0+ACXX iC2-30FA1N02-04A2E20F4+ACXX	MA01c	C1 & C4	No	FC-51PK75S2E20H3XXCXXXSXXX	M1	C1	No
1.5/ 2.0	6.8	iC2-30FA1N02-06A8E20F0+ACXX iC2-30FA1N02-06A8E20F4+ACXX	MA02c	C1 & C4	No	FC-51P1K5S2E20H3BXCXXXSXXX	M2	C1	No
2.2/ 3.0	9.6	iC2-30FA1N02-09A6E20F0+ACXX iC2-30FA1N02-09A6E20F4+ACXX	MA02a	C1 & C4	No	FC-51P2K2S2E20H3BXCXXXSXXX	M3	C1	No

Voltage 3 x 200-240 V AC

Power rating [kW/ hp]	Current rating [A]	iC2-Micro				VLT® Micro Drive FC 51			
		Model code	Enclosure	EMC level	Brake chopper	Type code	Enclosure	EMC level	Brake chopper
0.18/ 0.24	1.2	N.A.				FC-51PK25T2E20H3XXCXXXSXXX	M1	C2	No
0.37/ 0.5	2.2					FC-51PK37T2E20H3XXCXXXSXXX	M1	C2	No
0.75/ 1.0	4.2					FC-51PK75T2E20H3XXCXXXSXXX	M1	C2	No
1.5/ 2.0	6.8					FC-51P1K5T2E20H3BXCXXXSXXX	M2	C2	No
2.2/ 3.0	9.6					FC-51P2K2T2E20H3BXCXXXSXXX	M3	C2	No
3.7/ 5.0	15.2					FC-51P3K7T2E20H3BXCXXXSXXX	M3	C2	No

Voltage 3 x 380-480 V AC

Power rating [kW/ hp]	Current rating [A]	iC2-Micro				VLT® Micro Drive FC 51			
		Model code	Enclosure	EMC level	Brake chopper	Type code	Enclosure	EMC level	Brake chopper
0.37/ 0.5	1.2	iC2-30FA3N04-01A2E20F2+ACXX iC2-30FA3N04-01A2E20F4+ACXX	MA01a	C2 & C4	No	FC-51PK37T4E20H3XXCXXXSXXX	M1	C2	No
0.75/ 1.0	2.2	iC2-30FA3N04-02A2E20F2+ACXX iC2-30FA3N04-02A2E20F4+ACXX	MA01a	C2 & C4	No	FC-51PK75T4E20H3XXCXXXSXXX	M1	C2	No
1.5/ 2.0	3.7	iC2-30FA3N04-03A7E20F2+ACXX iC2-30FA3N04-03A7E20F4+ACXX	MA01a	C2 & C4	No	FC-51P1K5T4E20H3BXCXXXSXXX	M2	C2	Yes
2.2/ 3.0	5.3	iC2-30FA3N04-05A3E20F2+ACBC iC2-30FA3N04-05A3E20F4+ACBC	MA02a	C2 & C4	Yes	FC-51P2K2T4E20H3BXCXXXSXXX	M2	C2	Yes
3/4	7.2	iC2-30FA3N04-07A2E20F2+ACBC iC2-30FA3N04-07A2E20F4+ACBC	MA02a	C2 & C4	Yes	FC-51P3K0T4E20H3BXCXXXSXXX	M3	C2	Yes
4/5.5	9.0	iC2-30FA3N04-09A0E20F2+ACBC iC2-30FA3N04-09A0E20F4+ACBC	MA02a	C2 & C4	Yes	FC-51P4K0T4E20H3BXCXXXSXXX	M3	C2	Yes
5.5/ 7.7	12.0	iC2-30FA3N04-12A0E20F2+ACBC iC2-30FA3N04-12A0E20F4+ACBC	MA03a[1]	C2 & C4	Yes	FC-51P5K5T4E20H3BXCXXXSXXX	M3	C2	Yes
7.5/ 10	15.5	iC2-30FA3N04-15A5E20F2+ACBC iC2-30FA3N04-15A5E20F4+ACBC		C2 & C4	Yes	FC-51P7K5T4E20H3BXCXXXSXXX	M3	C2	Yes
11/15	23.0	iC2-30FA3N04-23A0E20F2+ACBC iC2-30FA3N04-23A0E20F4+ACBC	MA04a[1]	C2 & C4	Yes	FC-51P11KT4E20H3BXCXXXSXXX	M4	C2	Yes
15/20	31.0	iC2-30FA3N04-31A0E20F2+ACBC iC2-30FA3N04-31A0E20F4+ACBC		C2 & C4	Yes	FC-51P15KT4E20H3BXCXXXSXXX	M4	C2	Yes
18.5/ 25	37.0	iC2-30FA3N04-37A0E20F2+ACBC iC2-30FA3N04-37A0E20F4+ACBC	MA05a[1]	C2 & C4	Yes	FC-51P18KT4E20H3BXCXXXSXXX	M5	C2	Yes
22/30	43.0	iC2-30FA3N04-43A0E20F2+ACBC iC2-30FA3N04-43A0E20F4+ACBC		C2 & C4	Yes	FC-51P22KT4E20H3BXCXXXSXXX	M5	C2	Yes

[1] MA03a to MA05a will be available in near future

Comparison of **dimensions** and **mounting clearance**

Voltage type	Power rating	iC2-Micro						VLT® Micro Drive FC 51					
	[kW/hp]	Height [H]	Width [W]	Depth [D]	Height [H1]	Width [W2]	Weight [kg]	Height [H]	Width [W]	Depth [D]	Height [H1]	Width [W2]	Weight [kg]
1 x 220 V		N.A.						M1					
	0.18/0.24							150 (5.9)	70 (2.8)	148 (5.8)	140.4 (5.5)	55 (2.2)	1.1
		MA01c						M1					
	0.37/0.5	150 (5.9)	70 (2.8)	143 (5.6)	140.4 (5.5)	55 (2.2)	1.0	150 (5.9)	70 (2.8)	148 (5.8)	140.4 (5.5)	55 (2.2)	1.1
	0.75/1.0												
		MA02c						M2					
	1.5/2.0	176 (6.9)	75 (3.0)	164 (6.5)	150 (5.9)	59 (2.3)	1.3	176 (6.9)	75 (3.0)	168 (6.6)	166.4 (6.6)	59 (2.3)	1.6
		MA02a						M3					
	2.2/3.0	186 (7.3)	75 (3.0)	175 (3.0)	176 (6.9)	59 (2.3)	1.6	239 (9.4)	90 (3.5)	194 (7.6)	226 (8.9)	69 (2.7)	3
3 x 220 V		N.A.						M1					
	0.18/0.24							150 (5.9)	70 (2.8)	148 (5.8)	140.4 (5.5)	55 (2.2)	1.1
	0.37/0.5												
	0.75/1.0												
								M2					
	1.5/2.0							176 (6.9)	75 (3.0)	168 (6.6)	166.4 (6.6)	59 (2.3)	1.6
								M3					
	2.2/3.0							239 (9.4)	90 (3.5)	194 (7.6)	226 (8.9)	69 (2.7)	3.0
	3.7/5.0												
3 x 400 V		MA01a						M1					
	0.37/0.5	150 (5.9)	70 (2.8)	158 (6.2)	140.4 (5.5)	55 (2.2)	1.1	150 (5.9)	70 (2.8)	148 (5.8)	140.4 (5.5)	55 (2.2)	1.1
	0.75/1.0												
		MA01a						M2					
	1.5/2.0	150 (5.9)	70 (2.8)	158 (6.2)	140.4 (5.5)	55 (2.2)	1.1	176 (6.9)	75 (3.0)	168 (6.6)	166.4 (6.6)	59 (2.3)	1.6
		MA02a						M2					
	2.2/3.0	186 (7.3)	75 (3.0)	175 (3.0)	176 (6.9)	59 (2.3)	1.6	176 (6.9)	75 (3.0)	168 (6.6)	166.4 (6.6)	59 (2.3)	1.6
		MA02a						M3					
	3/4	186 (7.3)	75 (3.0)	175 (3.0)	176 (6.9)	59 (2.3)	1.6	239 (9.4)	90 (3.5)	194 (7.6)	226 (8.9)	69 (2.7)	3.0
	4/5.5												
		MA03a						M3					
	5.5/7.7	Not released						239 (9.4)	90 (3.5)	194 (7.6)	226 (8.9)	69 (2.7)	3.0
	7.5/10												
		MA04a						M4					
	11/15	Not released						292 (11.5)	125 (5.0)	241 (9.5)	272.4 (10.7)	97 (3.8)	6.0
	15/20												
		MA05a						M5					
	18.5/25	Not released						335 (13.2)	165 (6.5)	140 (5.5)	315 (12.4)	140 (5.5)	9.5
	22/30												

H = Height [mm (in)], W = Width [mm (in)], D = Depth [mm (in)], H1 = Height [mm (in)], W1 = Width [mm (in)]

Note

- H, W and D are for overall dimensions
- H1 and W1 are for mounting hole dimensions
- The potentiometer on the local control panel extends 6.5 mm (0.26 in) from the drive.

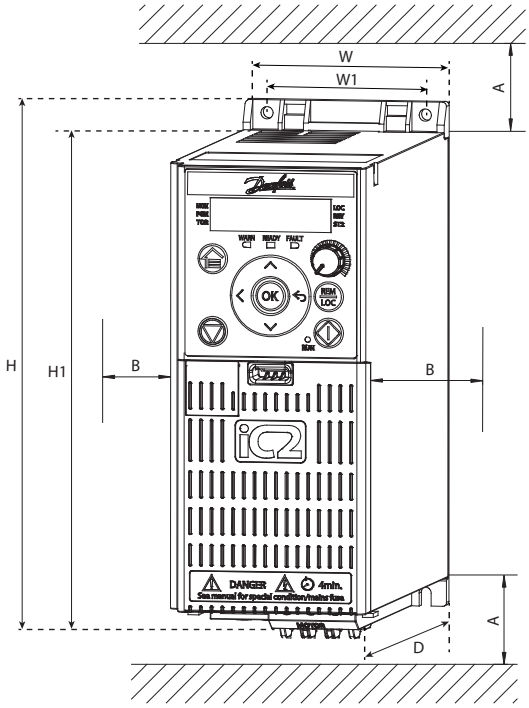

iC2-Micro

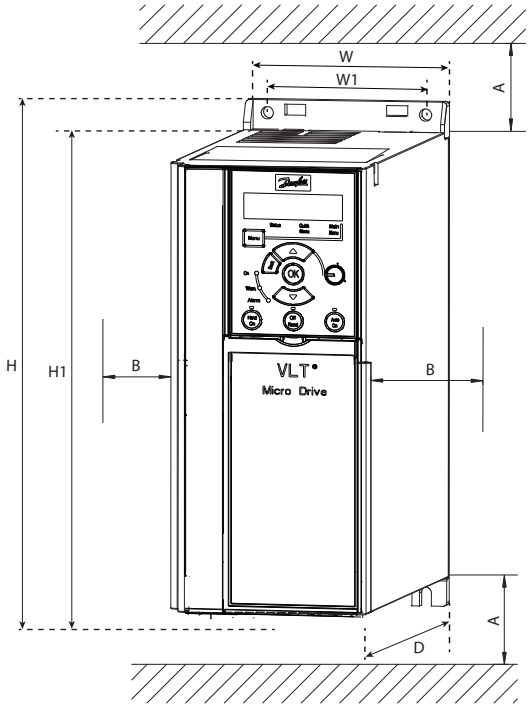

VLT® Micro Drive FC 51

Mounting clearance

	iC2-Micro		VLT® Micro Drive FC 51	
Direction	**Frame designation**	**Minimum cooling clearances**	**Enclosure size**	**Minimum cooling clearances**
Above and below (A)	All frame designations	100 mm (3.9 in) for 50 °C (122 °F)	All enclosure sizes	100 mm (3.9 in) for 40 °C (104 °F)
Sides (B)	MA01a to MA05a, MA02c	0 mm (0 in) for 50 °C (122 °F)	All enclosure sizes	0 mm (0 in) for 40 °C (104 °F)
	MA01c (natural cooling)	0 mm (0 in) for 40 °C (104 °F) 10 mm (0.39 in) and above for 50 °C (122 °F)		

ENGINEERING
TOMORROW

Comparison of **terminals**

Terminals

Attribute	iC2-Micro		VLT® Micro Drive FC 51	
Terminal type	Spring type		Screw type	
I/O terminals	Terminal number	Type	Terminal number	Type
	T12	24V	T12	24V
	T13	DI1	T18	DI1
	T14	DI2	T19	DI2
	T15	DIO	T20	GND
	T17	DI3	T27	DI3
	T18	DI4	T29	DI4
	T20	GND	T33	DI5
	T31	AO1	T42	AO1
	T32	10V	T50	10V
	T33	AI1	T53	AI1
	T34	AI2	T55	GND
	T35	GND	T60	AI2
	01, 02, 03	Relay	01, 02, 03	Relay
Digital output	Programmable T15 could be set as digtal output. Max. output current is 40 mA		Programmable T42 could be set as digtal output. Max. output current is 20 mA	
Pulse input	Programmable T18 can be set as pulse input (4-32 kHz)		Programmable T33 can be set as pulse input (20-5000 Hz)	
Pulse output	Programmable T15 can be set as pulse output (4-32 kHz)		N.A.	
Analog inputs mode switch	By software paramter		By hardware switch	
PNP & NPN switch	By software paramter		By hardware switch	
Illustration	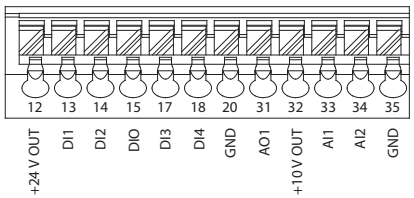		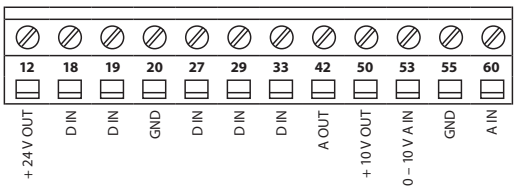	

How to **order**

To order, go to **store.danfoss.com** and choose country/region.

AD423936930805en-000101 | © Copyright Danfoss Drives | 2022.08

Any information, including, but not limited to information on selection of product, its application or use, product design, weight, dimensions, capacity or any other technical data in product manuals, catalogues descriptions, advertisements, etc. and whether made available in writing, orally, electronically, online or via download, shall be considered informative, and is only binding if and to the extent, explicit reference is made in a quotation or order confirmation. Danfoss cannot accept any responsibility for possible errors in catalogues, brochures, videos and other material. Danfoss reserves the right to alter its products without notice. This also applies to products ordered but not delivered provided that such alterations can be made without changes to form, fit or function of the product. All trademarks in this material are property of Danfoss A/S or Danfoss group companies. Danfoss and the Danfoss logo are trademarks of Danfoss A/S. All rights reserved.